Assembly Instructions

Caution: You should read this before proceeding

NOTE : FOR RESIDENTIAL USE ONLY .
NOT INTENDED FOR COMMERCIAL PURPOSES .

Chair

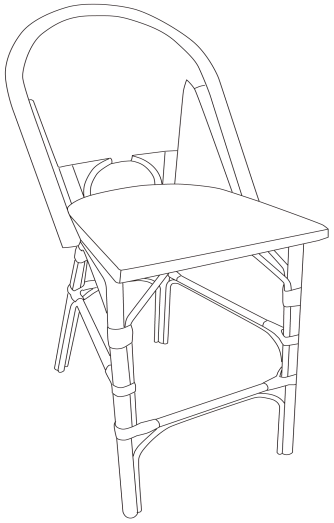

Parts List

Label	Picture	Description	QTY
A	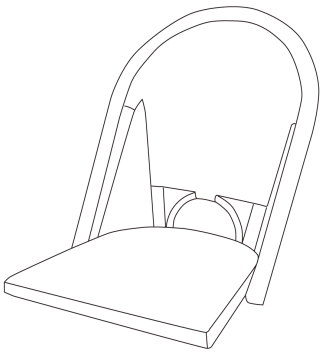	Backrest/Leg	1

B	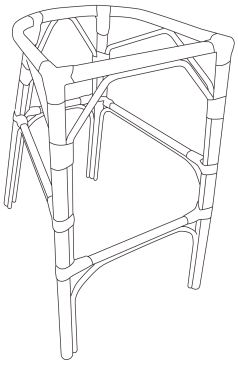	Seat/Leg	1

Hardware

Label	Picture	Description	QTY
①		Washer(M6)	4
②	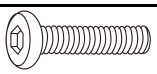	Bolt (M6*45mm)	4
③	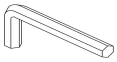	Allen Wrench(M6)	1

Assembly Preparation

Before Beginning Assembly:	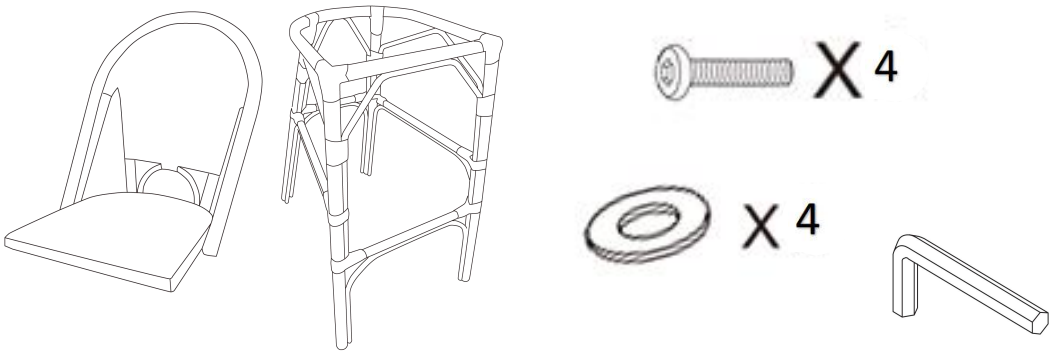

- Read instructions, cover to cover-
- Have 2 adults on hand for assembly-
- Do not assemble on flooring or carpet-
- Assemble on a clean non-marring surface (packing foam)-
- Save all packaging until finished-

Assembly Steps

Overview

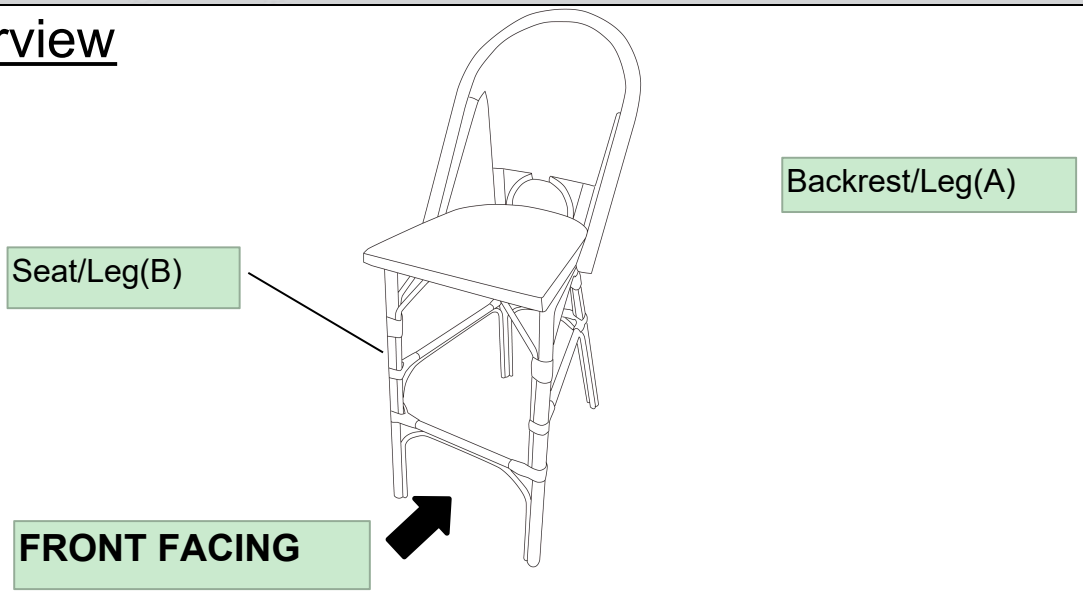

This Chair has multiple parts and may require up to 30 minutes to assemble.
To give you an overview of the Chair parts, the above picture is provided to help you put the various parts into perspective.
Please read through the instructions below to familiarise yourself with the parts and steps before assembly.

Step 1

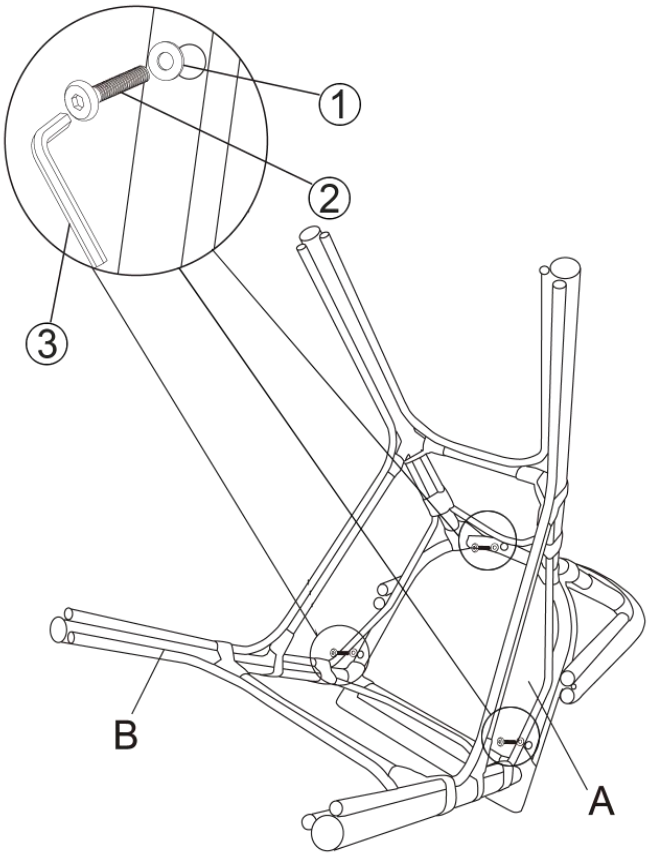

Open the carton and place all the parts onto a clean, non-marring surface.
Attach the Seat/Leg(B) to the Backrest/Leg(A) with the Washers(①) and Bolts(②) using the Allen Wrench③) as shown above.
Do not fully tighten any Bolt at this time. Lock tightly at the end.

Step 2

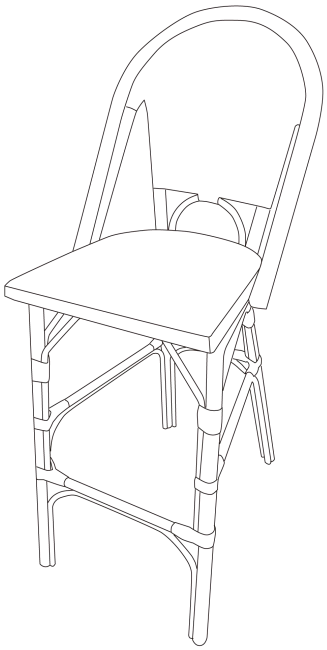

Stand the Chair up.
Place the Chair on a **LEVEL SURFACE.**
Inspect it and make sure all parts are adequately connected.
Gently and carefully, sit on the Chair.
This will help align all parts at all joints.
Then get off the Chair, and in a sequential manner, proceed to tighten all Bolts.
When tightening the Bolts, tighten sequentially.
DO NOT tighten any Bolt fully and then move on to the next one. This may cause the frame to warp. If the chair wobbles after tightening, loosen the Bolts and execute the same process.
If the Chair is not stable it could lead to damage of the product.
Your Chair is ready for use.
This Chair can only be used on a flat and level surface.

Care & Maintenance

- ⊘ Prolonged exposure to rain may cause rusting which can stain floors.
- ⊘ Do not put hot items directly on furniture surface.
- ⊘ Do not clean furniture with harsh cleansers or polish.
- ✓ To obtain the longest lifespan of your outdoor products, minimizing exposure to direct sunlight is recommended.
- ⊘ Children should not climb or jump on the furniture.
- ⊘ Do not write on furniture without a padded barrier to protect the surface.
- ✓ To obtain the longest lifespan of your outdoor products, avoid extended and lengthy exposure to rain, snow, and direct sunshine. Whenever possible cover the product and /or place under patio or awnings.
- ⊘ Not for commercial use. For residential use only.
- ⊘ Stains may be removed with mild soap solution and damp cloth.
- ✓ Keep away from sources of ignition.

- ✓ Dust and pick-up spills using a clean, non-colored, lint-free cloth.

Noble House Home Furnishings LLC